MECHANICAL OIL LEVEL REGULATORS

How It Works

The function of a Mechanical Oil Level Regulator is to control the oil level in the compressor crankcase. This protects the compressor from damage. There are two main types of Mechanical Oil Level Regulators - fixed level and adjustable level.

Oil is fed to the regulator via an inlet connection. An internal needle valve either allows or shuts off an oil supply to the regulator. An internal ball float controls the position of the needle valve. During compressor operation, the crankcase oil level reduces. A reduction in oil level activates the regulator, which ensures the correct crankcase oil level is achieved and maintained.

The adjustable regulator has an in-built mechanism that allows the ball float to be adjusted up or down. This means that the crankcase oil level can be adjusted, in line with the compressor manufacturer's guidelines. The fixed level regulator does not have an adjusting feature hence the crankcase will be maintained at a fixed oil level. Some regulator models are fitted with an equalisation connection that enables the oil levels between several compressors to be balanced.

In the majority of cases, Henry Group oil level regulators can be fitted directly to the compressor sight glass port. Where direct mounting is not possible, a separate adaptor can be used. Refer to Adaptor Kit table.

Main Features

- Proven needle valve design
- Stainless steel ball float
- Special mounting flange - allows direct fitting to standard compressors
- Premium quality neoprene seals
- Seal adaptor kit supplied with each model
- Visual indication of oil level via large sight glass
- Double O-ring stem seal design - adjustable model
- Easy adjustment mechanism - adjustable model

Applications

Mechanical oil level regulators are used in Low Pressure Oil Management Systems. They are designed for use with reciprocating compressors. They are not recommended for scroll compressors. They are suitable for use with HCFC, HFC, HFO, CO_2, A2L & HC refrigerants & associated oils compatible with the vessel materials.

Technical Specification

Allowable operating pressure: 0 to 31 barg
Allowable operating temperature: 0°C to +130°C

Refer to table for allowable oil pressure differential for the Henry range of regulators.

Important Information

1. As a result of modification to the Bitzer oil ventura device in May 1997, it is no longer necessary to provide an oil guard on the oil level regulator.
2. Copeland confirm a 1/2 sight glass oil level is acceptable, rather than 1/4 sight glass, for all compressors fitted with an oil management system.

Materials of Construction

The main components: shell, end caps and connections are made from carbon steel. The ball float is made from stainless steel. The needle valve seat is made from brass.

Installation Instructions

Scan or click the QR Code to download the full product installation and application instructions from our website.

Part No	Regulator type	Sight glass oil level	Equalisation	Allowable oil pressure differential, bar	Drawing reference	MWP (barg)	Weight (kg)	Compressor sight glass connection	CE/UKCA Cat
S-9510	Fixed	1/2	No	0.35 to 2.1	Fig.1	31	2.20	3-Bolt 1.7/8" B.C. & 4-Bolt 50mm B.C.	SEP
S-9510E	Fixed	1/2	Yes	0.35 to 2.1	Fig.1	31	2.20		SEP
S-9510V	Fixed	1/2	No	0.35 to 2.1	Fig.2	31	2.10		SEP
S-9530	Adjustable	1/4 to 5/8	No	0.35 to 6.2	Fig.3	31	2.30		SEP
S-9530E	Adjustable	1/4 to 5/8	Yes	0.35 to 6.2	Fig.3	31	2.30		SEP

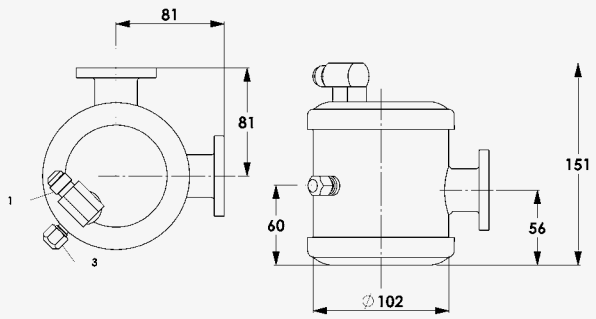

FIG.1

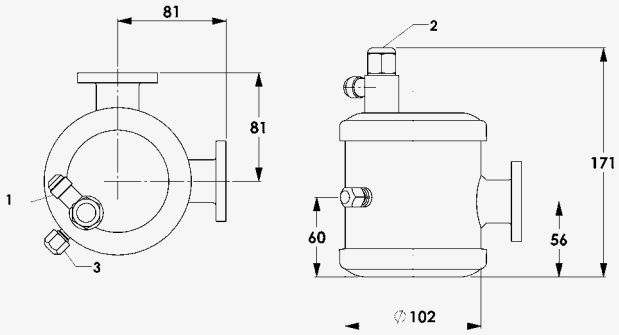

FIG.3

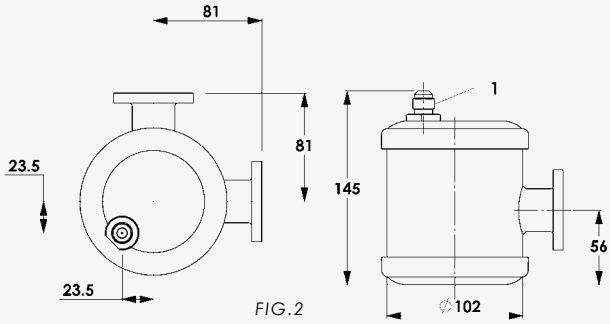

FIG.2

1. 3/8 SAE FLARE INLET
2. ADJUSTMENT
3. 1/4 SAE FLARE EQUALISATION (OPTIONAL)

Dimensions in mm

Selection Guidelines

The correct selection depends on the refrigerant type, differential oil pressure acting on the regulator, and the user's preference of crankcase oil level control. Some users prefer the simplicity of model S-9510 while others prefer model S-9530E, owing to the larger pressure differential, oil level adjustment and equalisation features.

Note: Differential oil pressure is the difference between the supply pressure at inlet to the regulator and the pressure inside the compressor crankcase. Gravity pressure head should also be included if applicable.

Installation - Main Issues

1. To protect the regulator from system debris, an oil strainer, oil filter or oil filter drier is recommended.
2. The regulator can be fitted directly to 2, 3 and 4 cylinder compressors and to most 6-cylinder compressors that use a standard 3 or 4 bolt sight glass. For other compressor configurations, an adaptor will be required.
3. The regulator should not be subjected to excessive vibration. The operating differential oil pressure should be within the range of the regulator's specification.
4. The oil level must be set and controlled in line with the compressor manufacturer's guidelines.
5. Full instructions are given in the Product Instruction Sheet included with each regulator.

Compressor Model	Sight Glass Configuration	Adaptor Kit Part Number	CE/UKCA Cat
Bitzer Octagon	1 1/8”- 18 Thread	3-033-262	SEP
Carrier models (EA,ER,OBE & OBCC)	3 Bolt 1 7/8” B.C.	3-033-201-HPT*	-
Copeland (8R & 8D)	3 Bolt 1 7/8” B.C.	3-033-212	SEP
Copeland Discus (4R,6R,9R,MD,MR,NR)	3 Bolt 1 7/8” B.C.	3-033-201-HPT*	-
Copeland (HA,KA,EA,3A,LA,ER & 3R)	1 1/8”- 12 Thread	3-033-202	SEP
Dunham (Bush Big 4)	3 Bolt 1 7/8” B.C.	3-033-201-HPT*	-
Frascold	3 Bolt 1 7/8” B.C.	3-033-201-HPT*	-
Prestcold (K)	1 1/8”- 12 Thread	3-033-202	SEP
Tecumseh (P,R,S,PA,RA,SA,CK,CM,CH,CG)	1 1/8”- 12 Thread	3-033-202	SEP
Trane (M,R)	3 Bolt 1 7/8” B.C.	3-033-201-HPT*	-
York (GC,GS,JS)	3 Bolt 1 7/8” B.C.	3-033-201-HPT*	-
Standard seal kit	N/A	3-033-201-HPT*	-

Warning: Regulators should not be operated at 1/4 sight glass or below when using an adaptor with an inside diameter smaller than the regulator flange port.

**Note: This is standard seal kit supplied with each S-95 series regulator. It includes all parts previously included in adaptor kit 3-033-201.*